DHF

Door & Hardware Federation

raising standards

Guide to gate safety legislation and standards

Guidance for the powered gate industry on current legislation and standards from the Door & Hardware Federation and endorsed by the Health and Safety Executive

Introduction

In June 2010, the tragic deaths of two young children in separate incidents less than one week apart served to highlight the safety issues facing the UK gate automation industry. This was particularly the case since these tragedies followed so soon after the conviction of a gate manufacturer for breaches of health and safety law in relation to an earlier child fatality.

This guide is presented as a summary of the current legislation and standards which it is hoped will assist the industry in understanding the requirements and meeting its obligations. This guide does not deal in any detail with the legal duties of the owner of the gate regarding risk assessment, inspection and maintenance.

The legal position is that powered gate systems are considered to be "machinery". This means that, by law, every new powered gate, when it is put into service, must comply with the European Machinery Directive (2006/42/EC), especially the Directive's Essential Health and Safety Requirements, be CE marked and accompanied by a Declaration of Conformity. The Health and Safety Executive has lead responsibility for enforcement of this legislation, which has been transposed into UK law as the Supply of Machinery (Safety) Regulations 2008. The responsibility for complying with the law rests with the responsible person which will be either the manufacturer, supplier or installer, depending on the circumstances.

The key to compliance with the law is risk assessment, which includes identifying the hazards, estimating the severity and likelihood of each hazard, followed by an evaluation to determine whether each hazard is adequately controlled and, if it is not, what further action needs to be taken to control the risk; the principal aim is to secure compliance with the Machinery Directive's Essential Health and Safety Requirements.

Some guidance on hazards presented by powered gates is given below. There are also European standards covering safety requirements and test methods; use of these standards will simplify risk assessment and compliance may also create a presumption of compliance with the law. It should, however, be noted that these standards were, for the most part, written for use in a factory environment and it may not be possible to carry out all the necessary tests where a gate is created on site. A brief description of the available standards is given.

Responsibilities of the installer/manufacturer

A new powered gate installation must comply with the Machinery Directive, particularly the safety requirements set out in the Essential Health and Safety Requirements. In most cases, the final responsibility for ensuring this will lie with the installer. This would apply in all of the following situations:

- The installer manufactures the gate and drive unit, including the controller
- The installer manufactures the gate, but uses controllers and drive units from another manufacturer
- The installer buys the gate, controllers and drive units from other manufacturers, and commissions the final assembly

However, when a complete gate is placed on the market, such as a "factory manufactured" gate supplied with all ancillary parts (all drive units, safety devices, and control units), and comprehensive installation and setting instructions, the person placing the product on the market will have the responsibility of complying with the Machinery Directive. The installer still has responsibility under the Health and Safety at Work Act 1974 to ensure the gate has been installed correctly and safely in accordance with those instructions, including any adjusting and setting of the safety devices.

Technical file

The Machinery Directive requires several key documents to be created in a "technical file". This file must be retained by the responsible person (ie: the individual or organisation responsible for CE marking) for at least ten years. Where the file is being created by the installer, the documentation would include the following:

- A description of the gate, including technical drawings, electrical/control schematics, and design calculations
- Risk assessments – including hazards identified and protective measures implemented to secure compliance with the applicable Essential Health and Safety Requirements
- Test results - including force testing results where applicable
- Any standards or technical specifications used, indicating the Essential Health and Safety Requirements covered by these standards
- Declarations of Incorporation or Conformity from suppliers of drives, controls and safety devices
- Installation instructions provided by suppliers of drives, controls and safety devices
- A copy of the operating instructions and maintenance log book issued to the customer
- A copy of the Declaration of Conformity issued to the customer

Declaration of Conformity

This document must be drawn up by the person responsible for CE marking.

The exact format is not prescribed but it must contain the following:

- Name and address of the responsible person
- Description and identification of the machinery
- A sentence declaring that the machinery fulfils the provisions of the Machinery Directive 2006/42/EC. Where relevant, similar sentences relating to other directives which are applicable
- A reference to the harmonised standards used (if appropriate) eg: EN 13241-1:2003
- References to other technical standards and specifications used
- Signature, date and place of the declaration

A copy of the declaration must accompany the gate.

CE marking

The marking consists of the letters "CE", affixed visibly, legibly and indelibly to the machine. This must be accompanied by the name of the responsible person (generally the installation company in the case of gates).

What is it?

Risk assessment is a series of logical steps to permit analysis and evaluation of risks associated with machinery. Where necessary, this is followed by risk reduction. It may be necessary to repeat the process to eliminate hazards as far as practicable and to adequately reduce risk by implementation of protective measures.

How does it work?

The following steps can be identified:

Risk analysis

1. ***Determination of the limits of the machinery***. *Essentially, this part of the process is about setting boundaries to the risk analysis process. It includes both the intended use and reasonably foreseeable misuse of the gate. Limits on use would include what operating modes are available and who is likely to use and/or come into contact with the gate, their physical abilities, their level of knowledge, etc. Space limits would include the range of movement, location of controls and space required for maintenance. Limits on time would include the life times of components and recommended service intervals. Environmental limits could include whether the gate is expected to operate in extreme weather conditions.*

2. ***Hazard Identification***. *This includes the systematic identification of reasonably foreseeable hazards which could arise at any stage of the gate's life, including while it is being commissioned, used, maintained, or dismantled. Many of these hazards are mentioned below (under "Standards"), but this cannot be regarded as a comprehensive list.*

3. ***Risk estimation***. *The risk associated with each hazard will depend on the* ***severity*** *of the harm caused and how* ***likely*** *it is that harm will be caused. The likelihood, in turn, depends on exposure of people to the hazard, the probability of the hazardous event and the possibility that the harm can be avoided or limited.*

Risk evaluation

This process must be carried out to determine whether risk reduction is required. If the need for risk reduction is identified, then, once the necessary measures have been taken, the process of risk analysis and evaluation should be repeated to ensure that no further risk reduction is required. Satisfactory risk reduction requires that, in order of preference:

a) The hazard has been eliminated or the risk reduced by design;

b) The risk has been reduced by the application of safeguarding measures (see below for examples);

c) When (a) or (b) are not practicable, adequate warning of any remaining risk and instructions required to control it has been given to users;

d) The application of mitigation measures e.g. means by which persons may be released from the hazard quickly and safely.

STANDARDS

To aid manufacturers in meeting the Machinery Directive's requirements, a "harmonised" European product standard for gates was published in 2003: BS EN 13241-1. The fact that it is harmonised means that, if a gate complies with the standard, there is a legal presumption that it complies with health and safety requirements of the directive itself. In this case, the need for risk assessments is reduced and they would be mainly directed at specific site conditions, rather than basic product design. The harmonised standard is in turn underpinned by a group of "supporting" standards which contain requirements for various aspects of the gate's performance and design. However, where the level of safety to be applied is ambiguous, then a full risk assessment is likely to be required so that the correct level of safety is determined and provided.

This part of the guide is designed to provide installers with a summary of the key requirements of some of the main standards referred to by the product standard and show how to apply appropriate solutions to meet each requirement. However, with the exception of BS EN 12635, all these standards were designed principally for "type testing" a product in the factory or test laboratory. Also, the standards were developed in the 1990s and the state of the art has developed since then, with new safety devices becoming available.

Users of this guide should be aware that The Health and Safety Executive in the UK has challenged certain aspects of the currently-published standards as they apply to gates as a result of recent investigations into gate accidents. Consequently, we have in some cases made recommendations relating to appropriate solutions within the current state of the art which go beyond the requirements in the currently published standards. Furthermore, where a gate is created on site rather than in a factory, or where the physical layout differs from that assumed by the factory or test laboratory, it may not be possible to apply the standards in their entirety. In this case, partial compliance with a standard will not give **automatic** compliance with the directive but can be used as part of the risk assessment process that will ultimately lead to compliance with the directive's essential health and safety requirements.

BS EN 13241-1, Industrial, commercial and garage doors and gates. Harmonised product standard. Supporting standards include:

1. **BS EN 12453:2001,** Industrial, commercial and garage doors and gates. Safety in use of power operated doors. Requirements.

2. **BS EN 12445:2001,** Industrial, commercial and garage doors and gates. Safety in use of power operated doors. Test methods.

3. **BS EN 12978:2003**, Industrial, commercial and garage doors and gates. Safety devices for power operated doors and gates. Requirements and test methods.

4. **BS EN 1760-2:2001,** Safety of machinery. Pressure sensitive protective devices. General principles for the design and testing of pressure sensitive edges and pressure sensitive bars.

5. **BS EN 12604:2000** Industrial, commercial and garage doors and gates. Mechanical aspects. Requirements.

6. **BS EN 12605:2000** Industrial, commercial and garage doors and gates. Mechanical aspects. Test methods.

7. **BS EN 12635:2002** Industrial, commercial and garage doors and gates. Installation and use (harmonised).

8. **BS EN ISO 13857:2008** Safety of machinery. Safety distances to prevent hazard zones being reached by upper and lower limbs.

These and other British standards are available from BSI: http://www.bsigroup.com/

The standards explained

EN 12453 – Key Requirements. The level of safety required is determined by the risk:

Type of control	Conditions of use		
	Trained users, no public present	Trained users, public may be present	Untrained users, public may be present
Hold to run (ie continuous pressure required) located in sight of gate	0	*	***
Impulse (ie continuous pressure not required) located in sight of gate	*	**	***
Impulse not located in sight of gate	**	***	***
Automatic	***	***	***

Key to table

0 = no additional safety required;
* = Key switch or similar to prevent unauthorised use;
** = EITHER force limitation OR a means of presence detection which ensures that **in no circumstances** can a person be touched by the gate;
*** = EITHER a combination of force limitation and presence detection which would detect a person or obstacle on the floor at either side of the gate OR a means of presence detection which ensures that **in no circumstances** can a person be touched by the gate.

Note that "force limitation" in this context can refer to protection built into the drive system and/or to protection provided by PSPE PSPE - pressure sensitive protective equipment (safety edges). Also, "presence detection" in this context can refer to ESPE - electro-sensitive protective equipment (photoelectric cells). When referring to presence detection preventing a person being touched by the gate in any circumstances, currently photoelectric/laser light curtains providing a detection area from ground level up to a height of 2.5 metres should be used and are the current "state of the art" devices available to provide this level of protection.

This standard was published eleven years ago and does not reflect the latest developments. It permits certain safety requirements for presence detection systems to be disregarded where the system is combined with force limitation. It also permits presence detection in such cases to be operative on only one side of the door or gate. Neither of these provisions is now regarded as acceptable; presence detection must operate on both sides of a gate and comply fully with the requirements for sensitive protective equipment.

It will be seen that, in most cases, a perimeter gate where the public may be present as users or passers-by will require the highest (***) category of safety provision.

The standard also:

- defines areas of crushing, shearing & draw in on gates (see figure 1). (Note that if such risks exist in these areas they must be safeguarded in addition, using means such as infilling with mesh to prevent access through rails and use of suitable CE marked protective safety devices.)
- stipulates a maximum of 400N of crushing force allowed before gate should start to reverse in these areas (see diagrams)
- for gaps greater than 500 mm a maximum crushing force of 1400N is specified
- stipulates that the force exerted on contact must have reduced to no greater than 150N within 750 milliseconds
- specifies a requirement to reduce force & back off for both opening & closing operations of the gate system

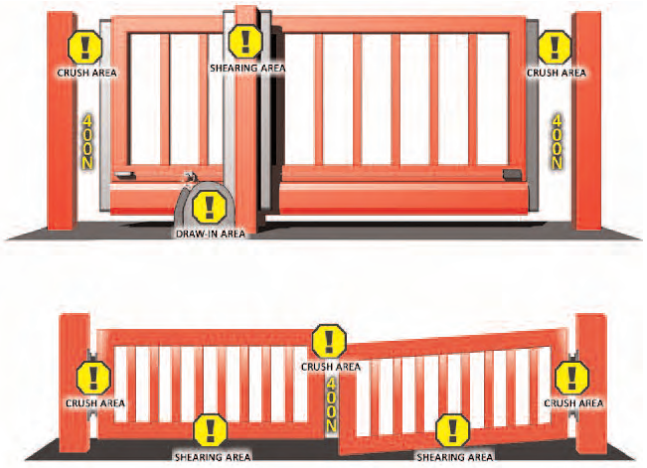

Figure 1 - Hazards

- defines that a danger area is considered to exist when a gap between the gate and a stationary object reduces to 50cm or below
- requires selected force limitation technology to protect danger areas of gate fully up to a height of 2.5 metres on both sliding and swing gates (figure 2)
- requires controls to be sited so that the operator is not in a dangerous position
- lists accepted technologies for providing this protection as :-

    1. inherent protection (eg: torque limitation, encoders or sensors) in drive units

    2. electro-sensitive protective equipment (eg: light curtain devices)

    3. pressure-sensitive protective equipment (eg: safety edges).

Figure 2 – safeguarding required up to 2.5m from ground level

The above listed technologies provide protection utilising current "state of the art" techniques available to the UK gate installation market.

Notes:

1. a flexible edge may be required in order to achieve the force limitation required.
2. the requirement to reduce force and back off are important to prevent sustained crushing and suffocation should some one get caught.
3. consideration should not be limited to just the closing edge but also to the opening and hinged areas.
4. over-running of the gate when opening or closing that could lead to the gate becoming detached and falling should also be considered e.g. stops provided to ensure this does not happen.

EN 12445 – Key requirements

- Defines force testing requirement points on sliding and swing gates as the areas illustrated in the diagrams below, please note that the area designated for testing on swing gates when opening only exists when a gate opens within 500mm of a wall, fence or other object in the gate's travel
- Test points are horizontally 500mm, 300mm, 50mm from stop post (See figure 3)
- Vertically 300mm from top of gate, 50mm from bottom & halfway between these points
- Each test point is measured 3 times
- The average value is then calculated from these results and submitted as a PASS or FAIL
- An EN 12445 compliant force testing device must be used!

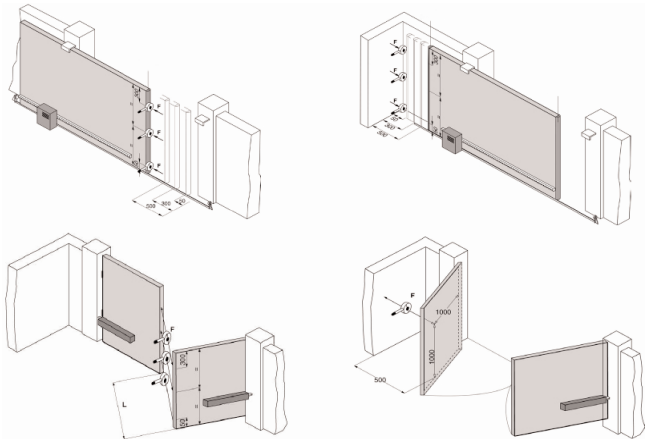

Figure 3 – measurement points for force testing to EN 12445

EN 12978 – Key requirements

- The current version of this standard is somewhat dated and covers only PSPE and ESPE; it does not cover either inherent force limitation or programmable systems. When selecting a gate automation product utilising Inherent force limitation technologies, the installer should ensure that the product is certified as a safety component under the Machinery Directive by a notified body or, failing this, sourced from a reputable manufacturer
- EN 12978 specifies the essential health and safety requirements to meet safety categories as defined in BS EN 954-1 (Safety of machinery – Safety related parts of control systems – Part 1. General principles for design). Note that BS EN 954-1 has been superseded by BS EN ISO 13849-1:2008 and that more recent equipment may be classified against this standard rather than BS EN 954-1
- The standard requires that the safety functions of the "control system" MUST be monitored to prevent undetected faults from occurring in the system resulting in the unsafe operation of the gate
- Any ESPE (eg light curtain) or PSPE (eg safety edge) devices attached to the control system either directly or through external transmission systems must be monitored against undetected faults to safety CATEGORY 3/4 of BS EN 954-1 or to CATEGORY 2 utilising an external test signal from the gate control system
- When using photoelectric devices (such as a light curtain or photocells) to provide the safety function of the automation, category 2 of BS EN 61496-1 must be observed

Note: "control system" in this context can refer to the gate automation control board that governs the operation of the attached drive unit(s) and ESPE or PSPE devices installed on the gate to provide protection.
Gate control boards that provide in-built CATEGORY 2 "TEST" signal facilities should be used in conjunction with ESPE/PSPE equipment or with external transmission systems that are CATEGORY 2 rated.
Gate control boards that do NOT provide this "TEST" facility should be used with external transmission systems that are CATEGORY 3/4 rated and then only if the control board meets the essential requirements for safe operation listed in the BS EN 12453 section of this document. In addition any wiring connection made to the control board from the transmission system should utilise armoured or protected cabling and ideally be located in the same enclosure or housing as the control board itself.

Note: "Transmission system" in this context can refer to the wired/wireless method used to connect the ESPE or PSPE device to the control system.

Note: When using a programmable device as the "control system" of the gate (such as a PLC/Inverter type system) the required essential health and safety requirements of machinery safety standard BS EN 62061:2005 should be observed. Only devices that meet this standard should be used.

CATEGORY 2 Definition:-

- A Category 2 system is not a self-testing unit and therefore needs to be tested externally by the control board before the start of every dangerous movement. In the event of a failure of the attached safety device or transmission system, the gate control system will not carry out any movement or will switch to a hold-to-run only mode.

CATEGORY 3 Definition:-

- A Category 3 system provides a self-test of the safety function permanently. In the event of a failure of the attached safety device or transmission system, the gate control system will not carry out any movement or will switch to a hold-to-run only mode

EN 1760-2 – Key requirements (if using safety edge devices)

- Defines level of sensitivity, performance characteristics, response time and percentage of sensitive surface area of safety edges used
- Tests on the edge are carried out by a notified body
- Certificates for the safety edge devices used must be made available upon request

EN 12604 & EN 12605 – Key requirements (see also BS 6180)

- Defines mechanical aspects and assembly of the gate
- Design should eliminate gaps over 100mm in the following areas (figure 4):
- Hinge posts
- Centre meeting points (swing gates)
- Gap between floor and gate

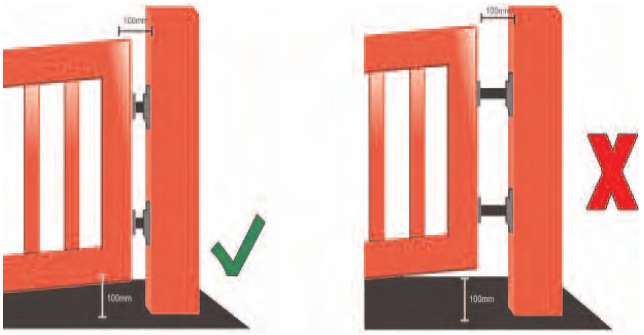

Figure 4 – avoiding gaps over 100mm

Notes:
1. Gaps that close due to movement of the gate, e.g. at the hinge post should also be assessed in relation to arm, leg and head trapping.

EN 12635:2002 – Key requirements

Specifies the information to be provided by the manufacturers of gates and components to ensure safe installation, maintenance, operation and use of powered gates.

Additional recommendations

The Health and Safety Executive has issued two safety notices relating to electric gates:
http://www.hse.gov.uk/safetybulletins/electricgates.htm - http://www.hse.gov.uk/safetybulletins/electricgates2.htm

Among the recommendations not specifically covered in the above European standards are:

Emergency arrangements. An important consideration is what happens if someone becomes trapped in the gate. Some designs may require use of a special release key or similar and, if this is the case, arrangements must be in place to ensure that the keys and instructions for their use are readily available to all authorised users.
Force testing. Use of force testing equipment is required if force limitation is used as a risk reduction measure, both when a new gate is installed and periodically thereafter.

SERVICING, MAINTENANCE & REPAIR OF EXISTING GATES

The current Machinery Directive 2006/42/EC came into force in the UK on 29/12/2009; however, there were no significant changes from the previous version of the directive in relation to safety requirements. Other legislation, including the Health & Safety at Work Act 1974, the Workplace (Health, Safety & Welfare) Regulations 1992 and the Provision and Use of Work Equipment Regulations 1998 applies to the use and maintenance of gates in the workplace.

Anyone who provides maintenance for gates installed before The Health and Safety Executive advisory notices were published should take steps to address safety on these sites. Companies should consider making contact with their existing customers to update them on legislation and current standards of safety and to offer a risk assessment service to ensure the gate is safe including any safety upgrade recommendations. If the person or company responsible for the gate declines to have any safety upgrades applied, the installer should keep a written record that the upgrades were refused.

Risk assessment is an essential requirement for compliance with the health and safety legislation referred to above and should be carried out by the installer or maintenance engineer to demonstrate that a gate is safe to be used and that necessary steps have been taken to bring the gate up to current standards. If an installation is found to be dangerous to the general public or employees on a commercial or industrial site, the installer should ensure the gate is left in a safe condition (e.g. out of use or on manual hold to run control) and should contact the client to explain the danger and that the gate has or must be taken out of automatic/remote use immediately. The installer should notify the client in writing what measures have and need to be taken and that the gate in question should remain out of service. If required, the installer should explain the reason: (e.g. that the installation contravenes the Workplace (Health, Safety & Welfare) Regulations 1992 or Provision and Use of Work Equipment Regulations 1998). The gate should not be placed in use again until the gate is signed off as meeting the requirements of the legislation.

If a residential installation is found to be dangerous to the general public due to its design, location and condition (e.g: accessible from a public right of way or road and unsafe), then the installer should again notify the client in writing that the gate should be taken out of action. It is possible that, if the client left the dangerous gate in operation, this could result in a civil claim resulting from any accident occurring on that gate.

In both of these circumstances, the device may be left switched off provided that this can be done without disconnecting a cable, removing a component or exposing a live conductor. The installer should inform the appropriate party in writing that the equipment is unsafe and should not be used again until it has been bought in line with current safety requirements.

FREQUENTLY ASKED QUESTIONS

Q: What is CE marking?

A: The CE mark is a declaration by a manufacturer that the product bearing the mark complies with relevant European directives. There are currently twenty-three directives providing for CE marking, ranging from medical devices to toys.

Q: Is CE marking a legal requirement?

A: Yes. In the case of most of the above directives, it is an offence to place a relevant product on the market without a CE mark. For example, powered gates are covered by the Machinery Directive and the CE mark must be applied when they are first placed on the market or put into service.

Q: Who is responsible for CE marking of machinery?

A: As a general rule, responsibility for CE marking machinery lies with the manufacturer or, if he cannot be identified, the person responsible for putting the machinery into service. In the case of powered gates, HSE has identified the responsible person as (in most cases) being the *installer*. This is because the gate as it leaves the factory is generally not regarded as being a complete machine since it cannot function until it has been installed and adjusted for site conditions.

Further information on CE marking is available at:
http://www.hse.gov.uk/work-equipment-machinery/ce-mark-summary.htm

Q: Where should the CE mark appear?

A: The Machinery Directive requires the marking to be indelibly applied to the machine in a visible position.

Q: Are any other directives relevant?

A: One CE mark will apply to all relevant directives. In the case of gates, the other relevant directives are the Low Voltage Directive, the Electromagnetic Compatibility Directive and the Radio and Telecommunications Terminal Equipment Directive. Compliance with these directives will have been declared by the manufacturers of the drive and control systems and will not normally be assessed by the installer.

Q: What is a Declaration of Conformity?

A: This is a document issued by the manufacturer (or installer, in the case of gates) declaring that the machinery complies with the Machinery Directive (and other applicable directives). It should be issued to the purchaser of a new machine. The machine to which it applies must be CE marked.

Q: What is a Declaration of Incorporation?

A: This applies to partly completed machinery (including drive systems) which are not CE marked under the Machinery Directive and declares that the equipment will comply with the directive if incorporated into the final machine in the manner foreseen by the manufacturer. The declaration should be retained in the installer's technical file, assuming that the installer will be responsible for completing the machine and issuing the final Declaration of Conformity.

Q: Who else is responsible for safety of a powered gate?

A: Except in a private dwelling where no staff are employed, the person in control of the premises has responsibilities under health and safety legislation. The relevant legislation includes the Health and Safety at Work Act 1974, the Workplace (Health, Safety and Welfare) Regulations 1992 and the Provision and Use of Work Equipment Regulations 1998. These responsibilities include ensuring that the gate is fitted with any necessary safety devices and maintaining it in efficient working order and, where a maintenance log book is provided, keeping it up to date. Note that 'efficient' in this context means from the point of view of health and safety (not convenience or economy).

Q: If an existing gate does not comply with current safety standards, who is responsible?

A: In contract law, it is an "implied term" of the sales contract that goods supplied will comply with any statutory requirements in force at the relevant time. However, the "state of the art" regarding safety tends to improve over time, while the condition of the gate may have altered since it was originally installed. This would mean that, while the original installer may be obliged to make good any deficiencies in the specification of the gate as originally supplied compared with the requirements in force at that time, extra work to upgrade the gate to today's standards or to repair worn or damaged parts would still be chargeable to the customer.

Historically, legislation and standards developed as follows:

Health and Safety at Work Act 1974	Section 3 of the act required employers to conduct their business so as to ensure that persons not employed by them are not exposed to risk (so far as is reasonably practicable).	Products must be safe to use, but there is no requirement to use any specific mark
Supply of Machinery (Safety) Regulations 1992 [EU Machinery Directive]	Required machinery to be safe and to carry the CE marking. Compliance was demonstrated principally by risk assessment since no harmonised standards existed at the time.	CE marking required from 1 January 1993
EN 12453:2000	Intended as a supporting standard to EN 13241-1, this nevertheless established the state of the art regarding safety of powered doors and gates. Available to support risk assessments.	Published as a BS in January 2001
EN 13241-1:2003	Harmonised product standard under both the Machinery Directive and the Construction Products Directive. Powered door safety requirements based on EN 12453. Compliance with EN 13241-1 gives a presumption of conformity with the directives.	Available for CE marking from 1 May 2004
Supply of Machinery (Safety) Regulations 2008 [EU Machinery Directive revision]	Revision of 1992 regulations; compliance process largely unchanged.	Replaced 1992 regulations from December 2009
The Health and Safety Executive Safety Notice FOD WSW 1-2010	Guidance confirms "state of the art" for safety of powered gates based on BS standards. The guidance is not itself law, but is rather an interpretation of the existing law, so could be challenged in court. However, this interpretation should be considered authoritative until modified or replaced.	Published 26 February 2010
The Health and Safety Executive Safety Notice FOD 7-2010	Updates and reinforces previous notice.	Published 2 September 2010
The Health and Safety Executive Safety Notice OPSTD 1-2011	Advice to landlords, commercial owners and facilities managers concerning gate safety.	Published 21 January 2011

Q: If the user of an unsafe gate refuses to have it upgraded, what should the installer do?

A: **Do** give the user a letter describing the problem and advising him/her to have it rectified;
Do give the user an estimate to carry out the work;
Don't remove any components or damage the gate in any way;
Do leave the gate switched off (provided that this can be done without exposing a live conductor, removing a component or doing any damage).

Q: What is the significance of the date 29 December 2009?

A: This is the date on which the UK's ***Supply of Machinery (Safety) Regulations 1992*** were repealed and replaced by the ***Supply of Machinery (Safety) Regulations 2008***. In practice, the differences between the two pieces of legislation are not very significant; both require new machines to be safe and to carry the CE mark. There should be no difference in the safety of a machine supplied immediately before the change and one supplied immediately afterwards.

Q: The customer wants me to supply a new gate automation system but refuses to accept the safety devices I am proposing. Can I supply the system without the safety devices?

A: No. Assuming that the new machine is unsafe without the proposed devices, supplying it would put you in breach of the Supply of Machinery (Safety) Regulations and potentially subject to a fine or imprisonment.

Q: Must I use a force tester?

A: This is a recommendation of the Health and Safety Executive Safety Notices and a requirement of the harmonised standard EN 13241-1. Where force limitation is used to control risk it will be necessary to test the forces, even if this is being done as part of a risk assessment rather than in order to comply strictly with the provisions of the harmonised standard. At the time of writing, we are not in a position to endorse any force testing devices other than those complying with the requirements of the harmonised standard (or, more specifically, with its supporting standard EN 12445). Consequently, although in principle it might be possible to carry out force testing as part of a risk assessment without using a compliant device, we are unable to suggest an alternative at the present time. The only exception to the need to test forces might be in the case of a very light pedestrian gate where, by design, the power of the motor and drive is so low that it cannot produce a damaging force during its movement.

Q: If I install the gate but leave the mains connection to be made by others at a later date, am I still responsible for the safety of the machine and for CE marking?

A: Yes. A machine is still a machine even if it is not yet connected to the mains.

The Door and Hardware Federation (DHF)

The Door and Hardware Federation represents the interests of manufacturers and installers of industrial, commercial, pedestrian and garage doors, gates, as well as manufacturers of locks and building hardware. It provides professionals in all sectors of the building industry with a single source for technical expertise. It has the ultimate aim of assuring progress and maintaining standards throughout the industry.

The DHF Powered Gate Group represents the UK's leading UK manufacturers, suppliers, and installers of powered perimeter gates. Its objective is to ensure every current and future gate installation in the UK will be safe and comply with the law and that the risk of death or injury due to inadequate manufacturing and installation will be dramatically reduced. It is dedicated to improving technical standards and raising quality within the industry.

The information provided in this guide is given in good faith and is based on long experience of working with standards, but directives are subject to interpretation by the courts and as a result the DHF can accept no responsibility for any errors or omissions contained herein.

DHF would like to thank members of the DHF Powered Gate Group who have made available their literature and training documentation in the course of compiling this guide; particular thanks are due to Easygates Ltd, ASO Safety Solutions and other DHF gate group members who have made available illustrations and information for this guide.

The Health and Safety Executive (HSE) was consulted in the production of this publication and endorses the sensible advice to installers on managing the risks from powered gates set out in the guidance.

DHF
Door & Hardware Federation
raising standards

42 Heath Street, Tamworth, Staffs B79 7JH Tel: (01827) 52337 Fax: (01827) 310827
E-mail: info@dhfonline.org.uk
website: www.dhfonline.org.uk

© Door and Hardware Federation 2012